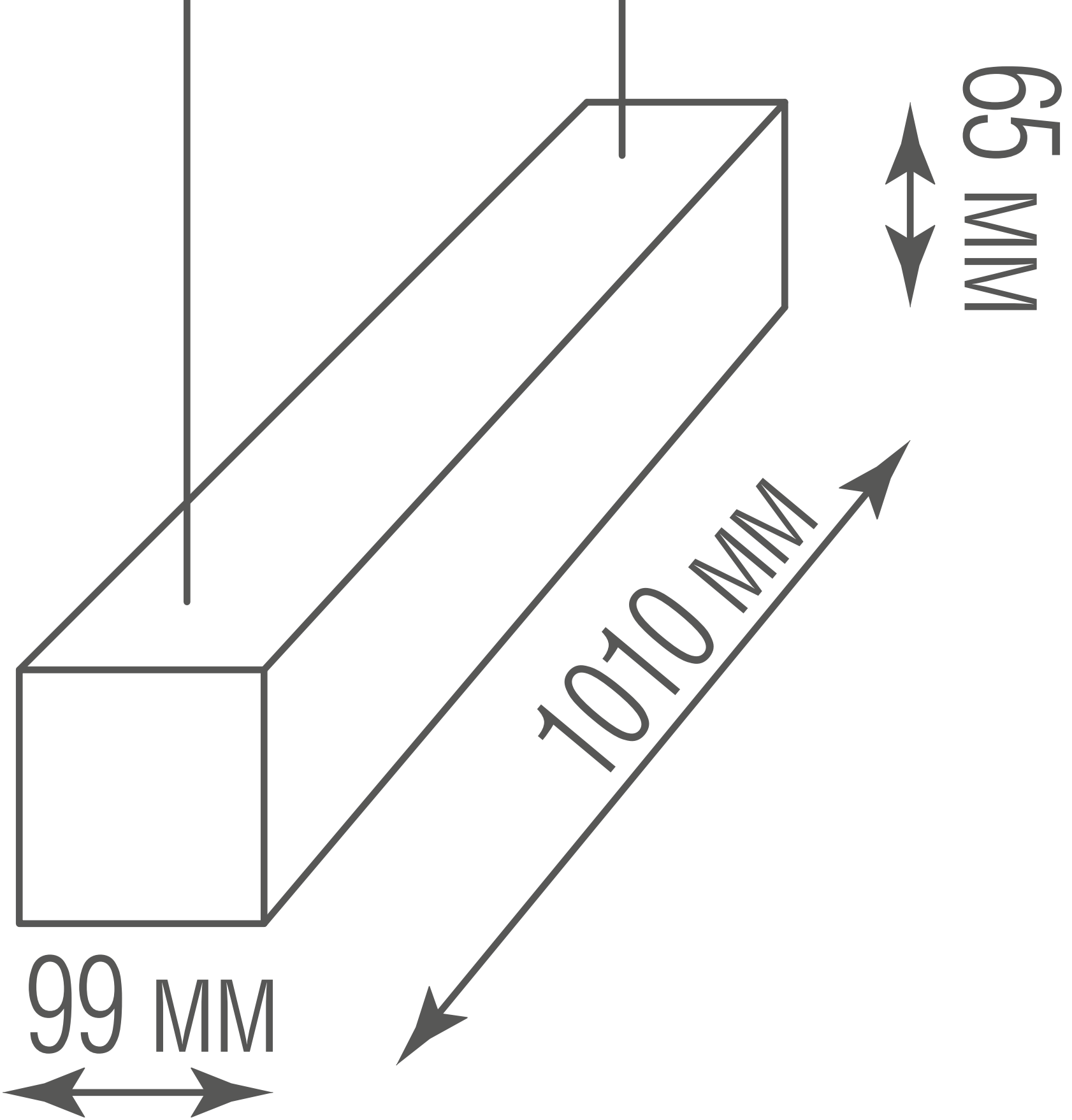
65 MM
1010 MM
99 MM