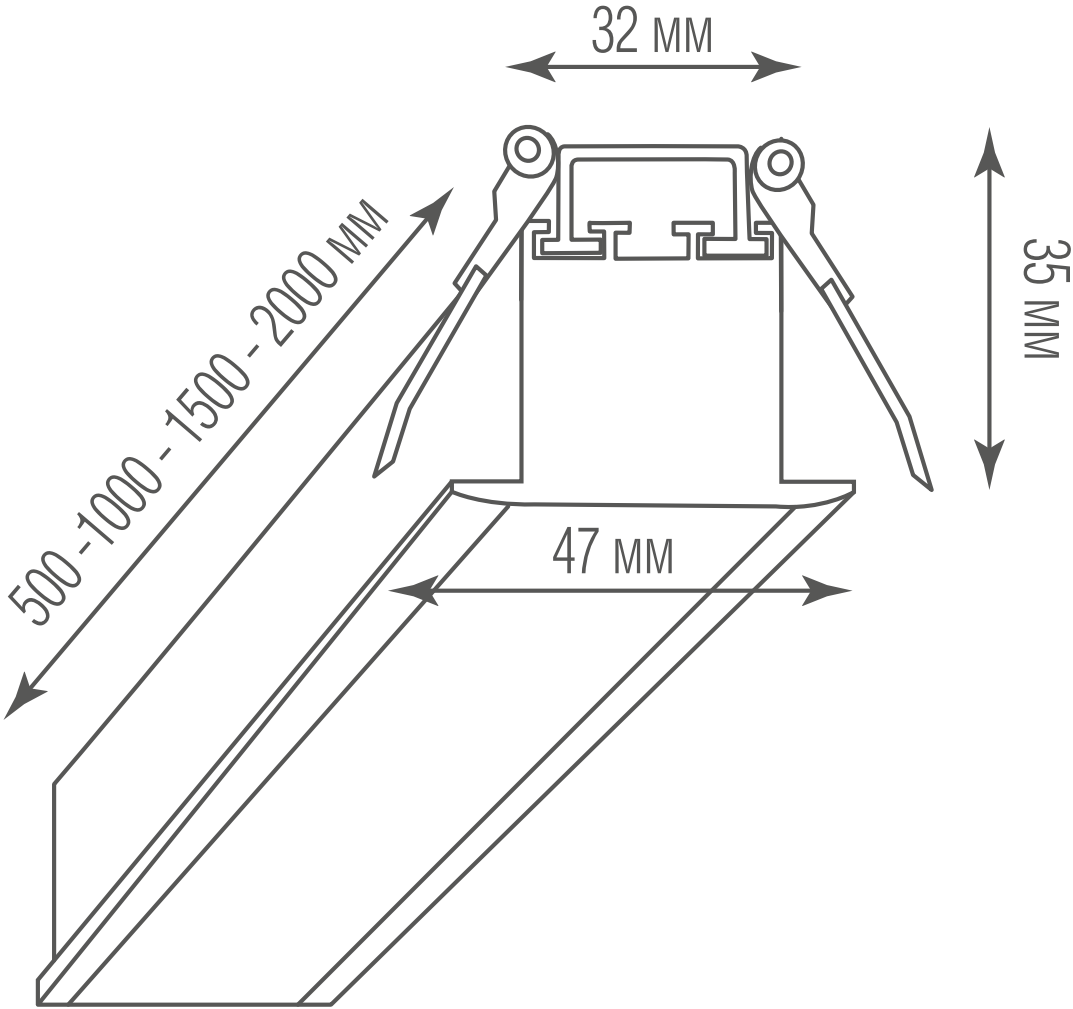
32 MM
35 MM
500 - 1000 - 1500 - 2000 MM
47 MM